ITEM NO.	PART NUMBER	DESCRIPTION	DRAWING #	QTY.
1	BO-1/4x1 FLHCS	BOLT 1/4 x 1 FLANGE HEAD CAP SCREW	STOCK	8
2	BO- 1/4 FLHCS	1/4 FLANGE NUT	STOCK	8
3	BO-1/4 FW	FLAT WASHER 1/4	STOCK	8
4	BO-3/8x1 FLHCS	FLANGE HEX HEAD CAP SCREW 3/8x1	STOCK	9
5	EL-B489A	REFLECTOR, AMBER	STOCK	2
6	EL-B489R	REFLECTOR, RED	STOCK	2
7	HD-HR-RED REFLECTIVE TAPE PS	REFLECTOR RED TAPE 4", HEADACHE RACK	STOCK	1
8	LB-CAUTION	STAY CLEAR DECAL	STOCK	1
9	LB-GREASE	GREASE DECAL	STOCK	2
10	LB-PRO SPEAR-DELUXEH	PRO SPEAR DELUXE HORIZONTIAL DECAL	STOCK	3
11	LB-PRO SPEAR-DELUXEV	PRO SPEAR DELUXE VERTICAL DECAL	STOCK	2
12	LB-TRIPLE C	TRIPLE C MFG. DECAL	STOCK	2
13	MI-B2014LSP	MUD FLAP, PLAIN	95-2201	2
14	RE-AS-DGN1900	GOOSENECK DOOR ASSEMBLY	11-1207	1
15	PS-PS-D249	PRO SPEAR DELUXE 250 BARE, PREPAINT	16-0252	1
16	SUB-PSD-SIDERAIL 250 DS	SIDE RAIL PSD 250 LEFT HAND	16-1202	1
17	SUB-PSD-SIDERAIL 250 PS	SIDE RAIL PSD250 RIGHT HAND	16-1202	1
18	SUB-PSD-SIDERAIL 50 F DR	SIDE RAIL, 50 SERIES PSD. DRIVER SIDE FRONT	16-1206	1
19	SUB-PSD-SIDERAIL 50 F PS	SIDE RAIL, 50 SERIES PSD. PASSENGER SIDE FRONT	16-1206	1

	REVISIONS		
REV.	DESCRIPTION	DATE	APPROVED
A	INITIAL RELEASE	5/12/2014	

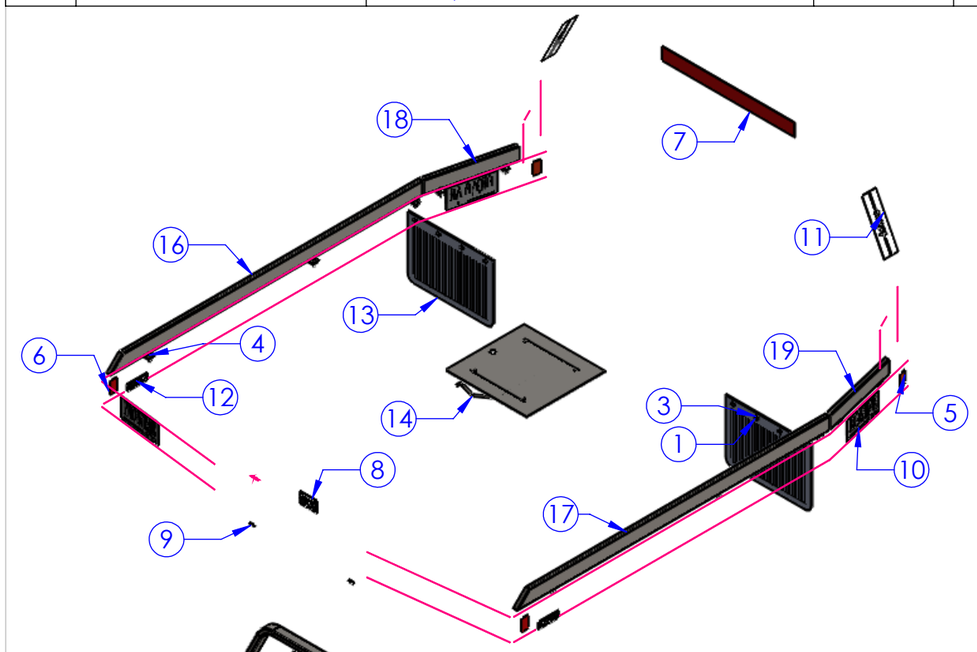

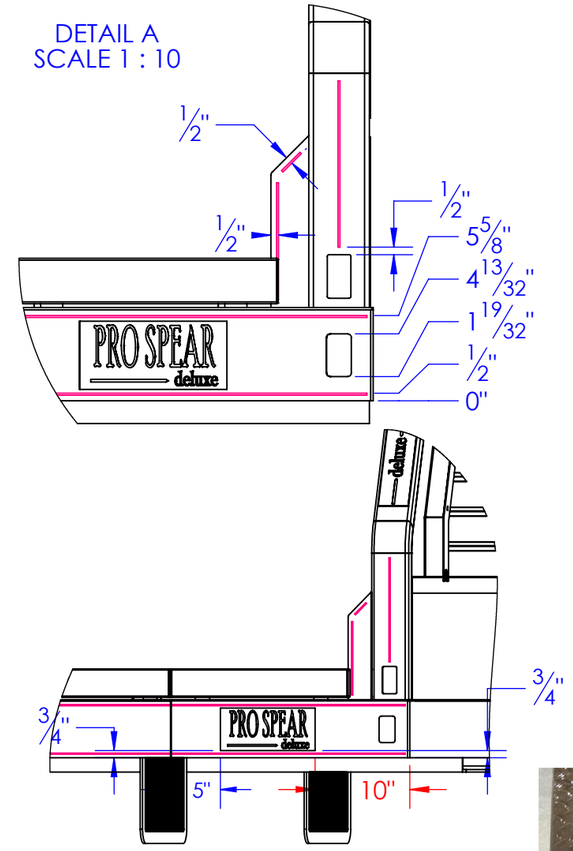

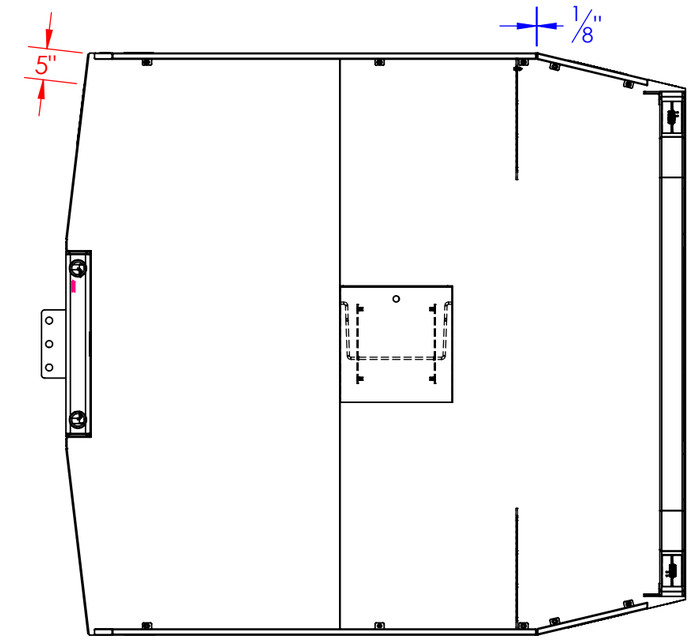

THE "D" ALWAYS STARTS AT THE BOTTOM & CENTER DECAL BETWEEN BENDS

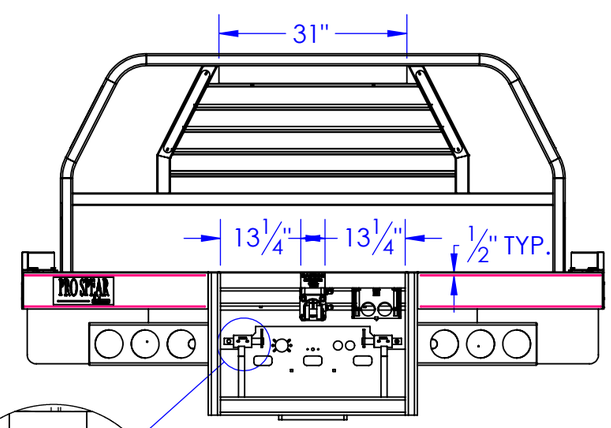

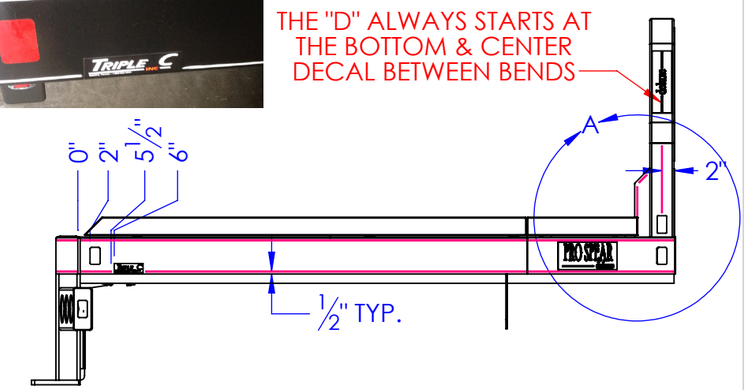

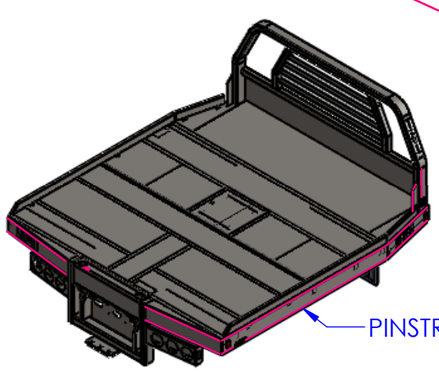

PINSTRIPE WHITE

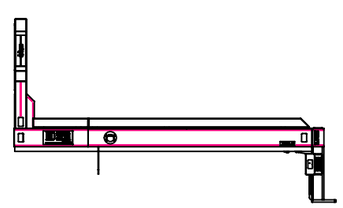

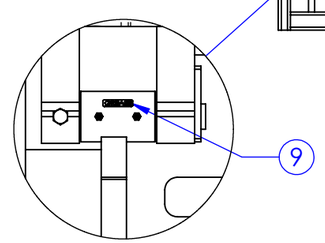

DETAIL B
SCALE 1 : 6

PROPRIETARY AND CONFIDENTIAL

THE INFORMATION CONTAINED IN THIS DRAWING IS THE SOLE PROPERTY OF <INSERT COMPANY NAME HERE>. ANY REPRODUCTION IN PART OR AS A WHOLE WITHOUT THE WRITTEN PERMISSION OF <INSERT COMPANY NAME HERE> IS PROHIBITED.

UNLESS OTHERWISE SPECIFIED:

DIMENSIONS ARE IN INCHES
TOLERANCES:
FRACTIONAL ±1/16
ANGULAR: MACH ± 1 BEND ±
TWO PLACE DECIMAL ±010
THREE PLACE DECIMAL ±005

MATERIAL

DO NOT SCALE DRAWING

	NAME	DATE
DRAWN	HEATH	5/29/2014
PART #		
ASM #	PS-PS-D249 TD	

COMMENTS:

PRO SPEAR
DELUXE 250
TRADE DRESS

P.O. BOX 248, SABETHA KS. 66534
(785) 284-3674 FAX (785) 284-3931

TRIPLE C INC.

SIZE	DWG. NO.	REV
B	16-0253	A

SCALE: 1:25 | WEIGHT: 1413.51 | SHEET 1 OF 1